Serial Number:	
Model:	

XLR8™ UPPER HEATED PLATEN
POWERED BY ACCUHEAT TECHNOLOGY

XLR8 HEATED PLATEN
INSTALL, SERVICE AND PARTS

AccuTemp Products INC
11919 John Adams Drive, New Haven, IN 46774
www.accutemp.net

MP5032-2104

TABLE OF CONTENTS

DOCUMENT HISTORY

Current Revision	Date	Prior Revision	Date	Revision
2104	04/14/2021	N/A	N/A	Original Release

1. WARNING SYMBOL DEFINITIONS

SYMBOL DEFINITIONS

Symbols are used to attract your attention to possible dangers. They are only effective if the operator uses proper accident prevention measures. Some of the symbols are boxed text; while others maybe just picture icons. Please give this information the respect they deserve for safe operation.

DANGER
Indicates an imminently hazardous situation; which, if unchanged, will result in death or serious injury.

CAUTION
Indicates a potentially hazardous situation; which, if unchanged, will result in minor or moderate injury.

NOTE
Advises the reader of information or instructions, vital to the operation or maintenance of the equipment.

CAUTION - HOT SURFACE

DANGEROUS VOLTAGE

EARTH GROUND

⚠WARNING

In the event of a power failure, do not attempt to operate this equipment.

⚠WARNING

Improper installation, adjustment, alteration, service or maintenance can cause property damage, injury or death. Read the installation, operating, and maintenance instructions thoroughly before installing or servicing this equipment.

⚠WARNING

Only qualified service technicians/electricians should install this equipment to ensure that all electrical and safety requirements are met and that all wiring is installed in accordance with all national, state and local electrical codes.

2. General Information
2.1 Unit Specifications

XLR8 Upper Heated Platen (Replace *** with voltage)	
Model #	XLR8***1B-00
208/1 Amp/ kW	10 A / 2.1 kW
240/1 Amp / kW	11.3 A / 2.7 kW
Breaker Size	15A
Unit Width (1 arm)	11.50
NEMA Plug (208/240)	L6-30P

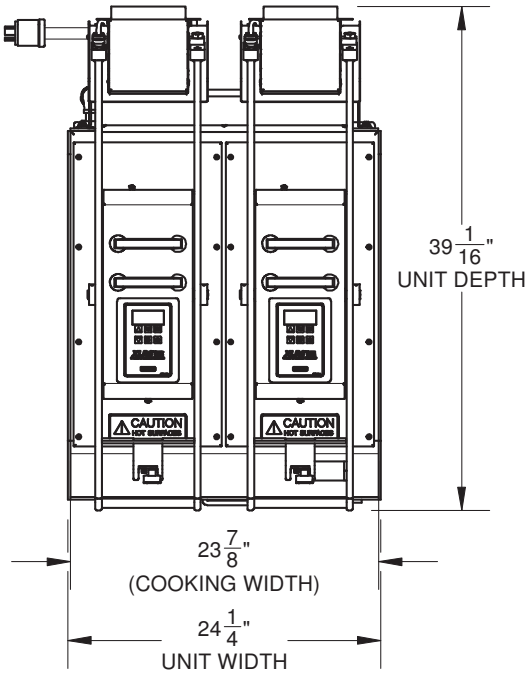

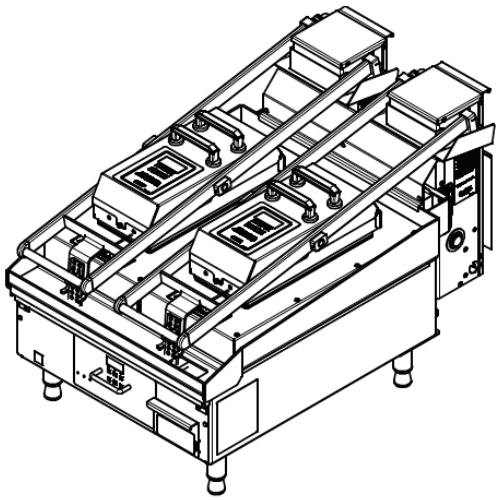

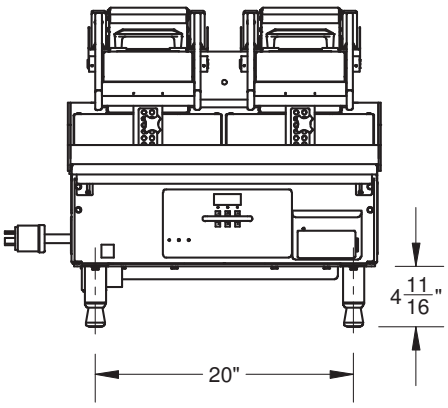

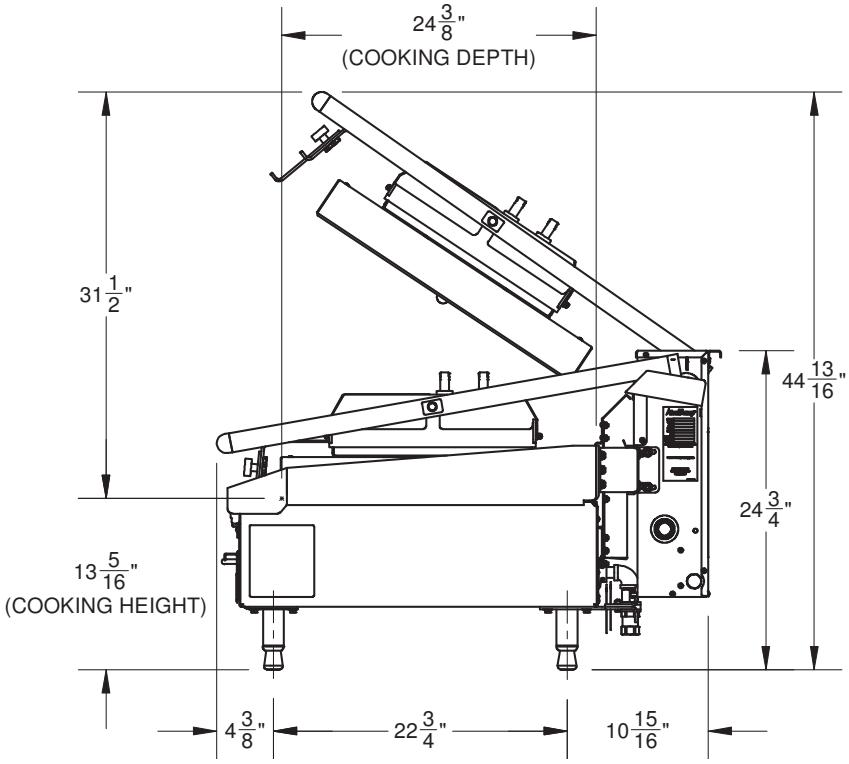

Drawing shown with (2) XLR8 Upper Heated Arms

3. INSTALLATION

3.1 INSTALLATION NOTICE

⚠ Only qualified service technicians/electricians should perform the installation to ensure that all electrical and safety requirements are met and that all wiring installations are performed in accordance with all national, state and local codes.

TOOLS REQUIRED:

Spirit Level
Phillips Screw Driver
Small Blade Straight Screw Driver
Digital Clamp Ammeter
Multimeter
Weighted Temperature Probe
Digital Temperature Meter

3.2 UNPACKING

This equipment was carefully inspected before shipment from the factory. The transportation company assumes full responsibility for safe delivery to the customer until customer acceptance of the package. Careful inspection of the packaging and the equipment should be completed before acceptance from the transportation company.

3.3 XLR8 LIFTING

The equipment is heavy enough to require additional manpower or powered assistance when installing or moving.

ⓘ When moving the equipment manually make sure there are enough people for the task as the equipment is heavy.

⚠ Make sure the equipment is not dropped during moving. People doing the carrying could be seriously injured and/or the equipment damaged. The manufacturer does not accept any responsibility for damage resulted from such actions.

3.4 LOCATION AND PLACEMENT

The XLR8 electric equipment has been designed to be mounted on an AccuTemp AccuSteam griddle.

The operating temperature of the platen ranges from 150°- 440°F (65.5°- 226°C). Since these temperatures can also be found on surfaces around the perimeter of this commercial equipment, care should be given not to install next to or against, objects or surfaces with a low melting or flash point.

3.5 CLEARANCES

Location	**Combustible Construction**	**Non-Combustible Construction**
Back	2 Inches	0 inches
Right Side	1 Inch	0 inches
Left Side	1 inch	0 inches
Above Arms	26 inches (+height of griddle)	26 inches (+height of griddle)
SUITABLE FOR ALL INSTALLATION ON COMBUSTIBLE FLOORS.		

3.6 LEVELING

The equipment must be installed in a level condition. An out-of-level condition will result in an uneven compression of product and uneven cooking.

3.7 ELECTRICAL CONNECTIONS

⚠ ⏚ This commercial equipment must be properly grounded in accordance of all current National, state and local codes. Never remove the ground prong of the plug.

3.7.1 ELECTRICAL SUPPLY

⚠ The electrical voltage requirement is listed on the data plate that is located on the lower left side panel.

⚠ Make sure the voltage is within 10% of the voltage listed on the steamer data plate.

⚠ Connection to any other voltage not identified on the data plate will cause damage to the components and is not covered under warranty.

⚠ Grounding provides a path for electric current to reduce risk of shock.

⚠ If provided with one, the plug must be plugged into a receptacle that is properly installed and grounded in accordance with all National, State and local electrical codes or in the absence of local electrical codes with the National Electric Code, ANSI/NFPA 70, or the Canadian Code, CSA C22.2 as applicable.

⚠ Under no circumstances shall the plugs grounding prong be cut or bent to fit a receptacle other than the one specified.

⚠ Do not use any adapters.

⚠ Any in-field modification made that bypass the safety features of this equipment will result in serious injury or death.

⚠ Any in-field modifications made without written authorization from AccuTemp Products, Inc. will void all written and oral warranties.

The XLR8 has been designed, manufactured and tested to meet or exceed the demanding standards of safety set forth by ANSI/NFPA 70. To to ensure that this high level of safety is maintained in your installation, it is important that you read and understand the following information before attempting to use the equipment.

3.7.2 ELECTRICAL REQUIREMENTS

Electrical requirements are listed on the data plate located on the front right of the control panel. All standard XLR8 are wired to an internal power supply terminal and draw power from the griddle.
If supplied with a 6ft (1.83m) cord and the appropriate UL listed plug, the equipment must be connected to the correct voltage specified on the units data tag. Depending on the rating listed on the data plate. Make sure that the voltage at your supply receptacle is within ± 10 % of the voltage listed on the griddle data plate. Connection to any other voltage may cause damage to components in the commercial equipment. The equipment plug must be used with the appropriate receptacle.

3.7.3 GROUNDING INSTRUCTIONS

Grounding provides a path for electric current to reduce the risk of shock. This product is equipped with a power cord having a grounding conductor and a grounding plug. The plug must be plugged into a grounded receptacle that is installed and grounded in accordance with local codes, or in the absence of local codes, with the *National Electric Code, NFPA 70, or the Canadian Electrical Code, CSA22.2*, as applicable

3.8 START UP PROCEDURE

1. Ensure both arms are square with the griddle. Use the griddle sides as a reference.
2. If adjustment is needed, loosen the nuts that hold the lift assembly to the base lift bracket.
3. Resecure the nuts once the arm assembly has been squared.

3.8.1 INSTALL TEFLON SHEET

1. Raise the two teflon retaining handles off the arm.
2. Secure one side of the teflon sheet using one handle, keeping the handle at the central point of the arm ("Figure 11").
3. Stretch the teflon across the underside of the platen and secure with the other retaining handle.

3.8.1 (OPTIONAL) UNLOCK PLATEN FLOAT

Should the customer wish it is possible to unlock the platen:

1. Loosen the two #10-24 X 1" Truss head cover mounting screws enough to lift the controller cover up but don't attempt to remove the screws.
2. Lift off the controller cover and allow to hang to one side.
3. Use a 5/16" wrench, socket wrench or nut driver to loosen the four #6-32 nyloc nuts retaining the float locks.
4. Remove completely or adjust the float locks to achieve the desired amount of float.
5. If the float locks are retained, tighten the four #6-32 nyloc nuts retaining the float locks to hold them in in the new position.
6. If the float locks are not retained, tighten the four #6-32 nyloc nuts on the studs to prevent them from coming loose or remove the nuts and flat washers entirely.
7. Reinstall cover and tighten the cover mounting screws.

TEST INSTALL

1. Plug in lift power cord to correct NEMA receptacle.
2. Power the XLR8 on using control buttons located on top of the arm.
3. Keep arm elevated an allow to heat to temperature displayed on control digital display.
4. Monitor temperature using a fluke wand meter.
5. Once unit has reached temperature allow 15 minutes for it to stabilize, then take three temperature readings from the front, middle and back of the arm cooking surface.
6. The temperatures should be with 5+/-F of the temperature displayed.

4. OPERATION

⚠ RISKS RESULTING FROM CONTACT WITH VERY HOT OBJECT:

♨ HOT

Hot areas may form during the cooking process. Use protective gloves whenever handling hot objects.

During the cooking process, do not handle cookware containing liquids or liquid foodstuffs located above eye level. Danger of burns.

⚠ Be sure all operators read, understand and follow the information contained in this manual including caution warnings, operating instructions and safety instructions.

⚠ Never use wet or damp gloves as moisture can conduct heat quickly.

⚠ Keep the floor in front of the equipment clean and dry. If spills occur, clean immediately to avoid potential injuries.

⚠ Do not use abrasive (or steel) materials, such as wire brushes, metal scouring pads to clean the teflon sheet surface.

4.1 VISUAL IDENTIFICATION

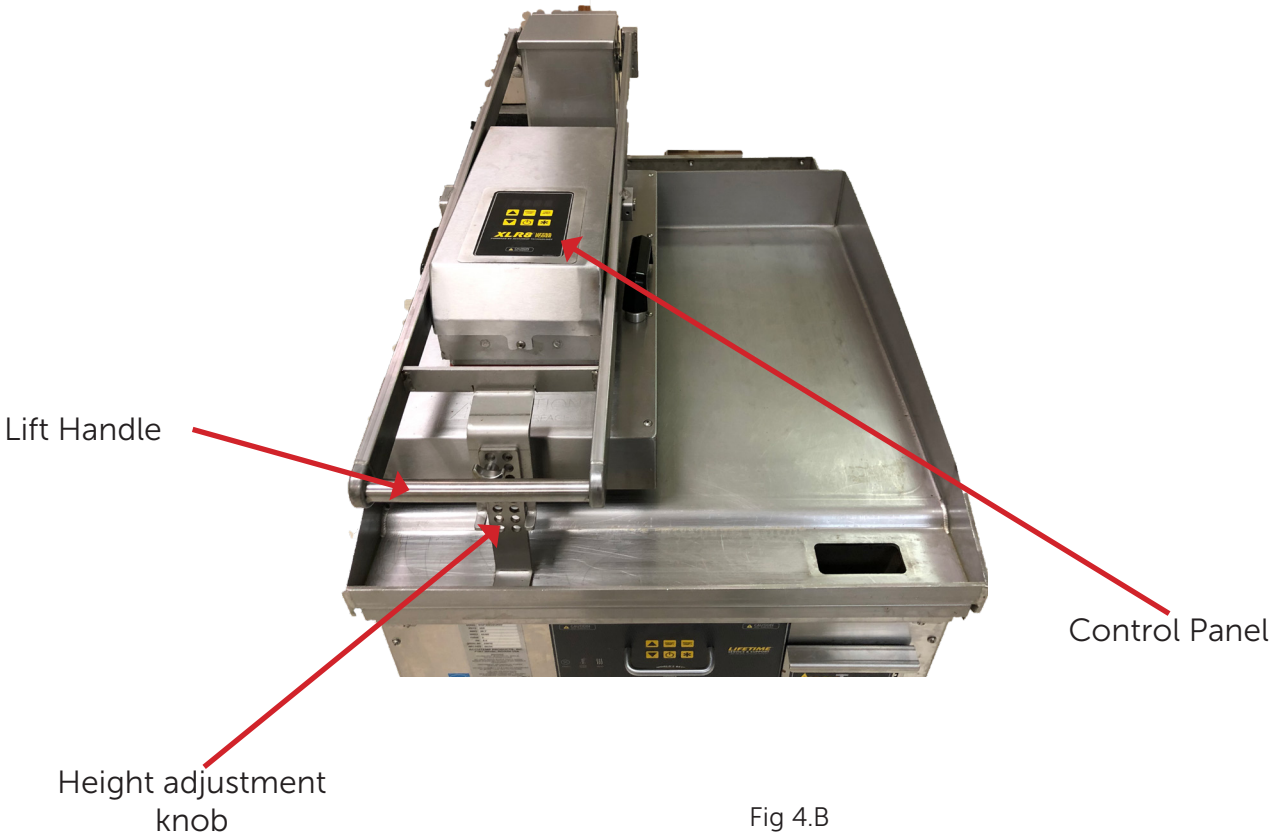

Fig 4.B

4.2 CONTROL OVERVIEW

The equipment digital temperature control is easy to operate and requires little customer interface.

OPERATOR DISPLAY AND KEYPAD

Fig 4.D

4.2.1 PROGRAM MODE

To enter Manager's mode, turn the unit OFF by depressing then press and hold the KEY and hold the key for minimum of 5 seconds. The control is now in Manager Program Mode the icon will light, LED1 only, will blink, and the keypad will be reconfigured as shown in the following table:

In managers mode, the keypad will operate as follows:

Program #	Program Description	MIN Setting	Max Setting	Default
1	ON/OFF KEY ENABLED	YES	NO	YES
2	PRESET TEMP 1	150	400	375
3	PRESET TEMP 2	150	400	350
4	PRESET TEMP 3	150	400	400
5	TIMER DEFAULT VALUE	OFF	60:00 MINS	00:30S

Once parameters are set as desired, the control panel can be locked to prevent manipulation without approval.

Toggle between programs	PRESET TEMP 1 Exit and save	TIMER RESET Increase displayed item
N/A	Cancel will exit without saving	Decrease displayed item

4.2.2 GENERAL OPERATION

1. Press the ON/OFF key to turn the unit on. The display will come on and show the current temperature in the display.
2. To turn the unit off press and hold the ON/OFF key for about 5 seconds.
3. Temperature control features:
4. PRESET TEMPERATURES:

A. To change to a different PRESET temperature press the PRESET TEMP key to toggle to the desired temp setting. (Default values are defined in Manager's mode, parameters 1, 2 and 3). The new selection will auto start after 3 seconds if no other key presses are made.

B. To change the temperature on the fly or change a pre-set temp value:

i. Press the PRESET TEMP key once to change on the fly to a desired operating temp or press the PRESET TEMP key multiple times to toggle to a specific pre-set to change (Default values are defined in Manager's mode, parameters 1, 2 and 3. Factory default temps are 375°F, 350°F and 400°F).

ii. Then press and hold the UP or DOWN keys for approximately 3 seconds, the LED indicator for the selected pre-set will blink. (The LED's indicate which preset is selected LED1=PRESET 1, LED2 = PRESET 2, and LED3 = PRESET 3.)

iii. Then press the UP or DOWN KEYS to increase or decrease the cook temperature.

iv. To store the new set temperature into a Preset memory, press and hold the ASTERISK key before the 3 seconds from the last key press are up.

5. Manual TImer Operation:

A. To start a timer sequence manually press the TIMER RESET key.

B. To stop a timer sequence before it runs out, press and hold the TIMER RESET key for about three seconds.

C. To silence the timer after it runs out, press the TIMER RESET key or the ASTERISK key.

6. Auto-Start Timer Operation

A. To start a timer sequence lower the handle.

B. To stop a timer sequence before it runs out, press and hold the TIMER RESET key for about three seconds.

C. To silence the timer after it runs out, lift the handle or press the TIMER RESET key or the ASTERISK key.

7. To set up user lock out to prevent anyone from changing the temperatures or timer values press and hold the UP ARROW key and the TIMER RESET key for 5 seconds while the controller is OFF. This will Toggle USER LOCKOUT parameter between "LOCKED" and "UNLOCKED".

4.3 COOKING

4.3.1 CLEAN AFTER INSTALLATION

It is recommended that you clean your XLR8 thoroughly before using it for the first time. To clean the equipment teflon cooking surface, just simply wash it down with a solution of mild soap and water, then rinse thoroughly with clean water and wipe dry with a clean towel.

> ⚠ **Please use caution as temperatures on and around the griddle cooking surface could cause severe burns.**

4.3.2 PREHEATING

Press the **ON/OFF** and select the desired preset. The upper platen should be approximately 40-50°F hotter than the griddle surface to achieve good caramelization on product.

The equipment will be preheated when the selected set temperature is displayed and the corresponding LED goes solid. Please use caution as temperatures on and around the cooking surface could cause severe burns.

4.3.3 ADJUSTING THE PLATEN GAP HEIGHT

The XLR8 arm has gap adjustment every 1/32nd of an inch. This gives you the control needed to adjust to any product up to 2" thick. To adjust the gap remove the adjustment arm in the front of the Upper Heated Platen. Raise the arm and place the desired product in the middle of the platen coverage area. With the griddle and arm on and preheated, lower the arm until you start to hear a sizzle from the product. This means you are applying slight pressure on the top of the product. At this point, install the adjustment arm onto the mounting plate. Place the lock bolt into the hole that lines up with the mounting plate and tighten.

4.3.4 ALLOWING THE PLATEN TO FLOAT

The platen is shipped in its 'locked' setting, which keeps the platen cooking surface horizontally level and is designed for the cooking of level products such as burgers.

If the product being cooked is uneven in nature, such as chicken, the platen can be unlocked, allowing it to float and enablish the even cooking of uneven product.

To unlock the platen see section 3.8.2 in the INSTALLATION chapter of this manual.

4.3.5 COOKING

If a recipe is provided for the product you are preparing, always follow your company guidelines for preparing product.

If adjusting your own recipe to incorporate the use of the XLR8 it is recommended to apply the following steps:

- Divide the total cook time applied to a product cooking on just the griddle surface by half. Adjust the time from there until you are happy with the finished product.
- Once you have the time and temperature for the product identified, use the programming instructions to set the timer and presets accordingly.
- Adding more compression (smaller gap between platen and griddle surface) will decrease cook time but may result in a dryer product.

4.3.6 CLEANING

- Power unit off and allow to cool until it is safe to touch, approximately 30 minutes.
- Remove teflon sheetand clean using mild soap and water solution and a towel.
- To clean the arm, once cooled, clean using mild soap and water solution and a towel. Rinse when done with clean water and allow to dry overnight.

⚠ Do not Power Spray the griddle or XLR8 Upper Heated Platen. A non-Metallic cleaning pad can be used to remove large debris or built up areas.

5. PLANNED MAINTENANCE CHECKLIST

It is recommended that you contact your AccuTemp authorized service provider to setup a planned maintenance program to keep your equipment operating in the most efficient manner. AccuTemp recommends a minimum of a yearly schedule.

PM TASK DESCRIPTION	Daily	Biannual	Yearly
Verify that the equipment is level and properly located under the hood.		X	X
Verify that the temperature controller is working properly and that there are no rips in the label.	X	X	X
Check that the splash shield at the top of the control panel is under the rail provided. If not water and or grease can migrate into control panel.		X	X
Inspect the control compartment for foreign particulate and any loose wiring or connections.		X	X
Check that the power supply cord is not frayed, outer covering is not degraded or any bare cooper is visible. Replace if required.	X	X	X
Verify amp draw to listed amp requirements on the data tag of the equipment.		X	X
If on an AccuTemp Stand verify mounting fasteners are in place and tight. If not correct. If the stand has casters check that the wheels are intact and that they are mounted correctly. If grease covered clean with a mild detergent and clean water. Dry completely. Apply a food grade silicone to the locking mechanism.	X	X	X
Complete a 3 point temperature test on the platen to check for even temperature across the surface of the cooking surface.		X	X
Check for grease buildup in the grease drawer container and clean it with a damp towel saturated with a mild detergent and clean water. Dry with a clean dry towel.	X	X	X
After all metallic areas are cool to the touch, clean external metal surfaces except the cooking surface. With a damp clean towel saturated with a mild detergent and clean water. Dry with a clean dry towel.	X	X	X

SERVICE

1. SEQUENCE OF OPERATION

1. When power is connected to power line voltage is supplied to the three position terminal block.
2. The white common lead from the terminal block is connected to the red "Y" harness which one side supplies common to the power in J2-1 terminal of the circuit board. The other side is daisy changed and connects to the common side of the heater element harnesses.
3. The black wire from the terminal block supplies power to one side of the fuse.
4. The other side of the fuse is connected to a "Y" harness consisting of a black wire connected to a high temp white wire.
5. Line voltage flows through the black wire of the "Y" harness and is connected to the controller power in J2-2 terminal.
6. Line voltage is connected to the white high temp wire of the "Y" harness and connects to position #1 (front) heater over temp thermostat.
7. Power flows through the front heater thermostat and to a white high temp wire which is connected to position #2 (middle) heater over temp thermostat.
8. Power flows through the middle heater thermostat and to a white high temp wire which is connected to position #3 (back) heater over temp thermostat.
9. Power flows through the back heater thermostat to a white high temp "Y" wire harness which connects to the controller circuit board terminal J7-1 then daisy chained to J7-3 and to J7-5.
10. When the ON/OFF key is pressed to turn the unit ON, relays K1, K3 and K5 are turned on allowing power to flow through to controller terminals J7-7, J7-4 and J7-6 then to each heater.
11. Temperature sensing is done through three RTD sensors, front (#1) middle (#2) and back (#3).
12. The front (#1) RTD is connected to the controller terminals J3-1 and J3-2.
13. The middle (#2) RTD is connected to the controller terminals J5-1 and J5-2.
14. The back (#3) RTD is connected to the controller terminals J4-1 and J4-2.
15. As the temperature rises and reaches the set point temperature the controller disengages relays K1, K3 and K5 and begins to regulate temperature to the set point.
16. A timer start/stop circuit reed switch is connected to the controller terminals IN1-1 and IN1-2.
17. When the arm is lowered a magnet engages the reed switch and closes the circuit to the controller, starting the timer.
18. When the arm is raised beyond the magnet field the reed switch disengages and opens the circuit to the controller, stopping the alarm or the timer if the timer is still running.
19. The timer can be disengaged from auto starting through the controller manager's mode.
20. Controller settings and options are covered in the operator's manual.

2. TROUBLESHOOT GUIDE

2.1 TROUBLESHOOT FLOWCHART

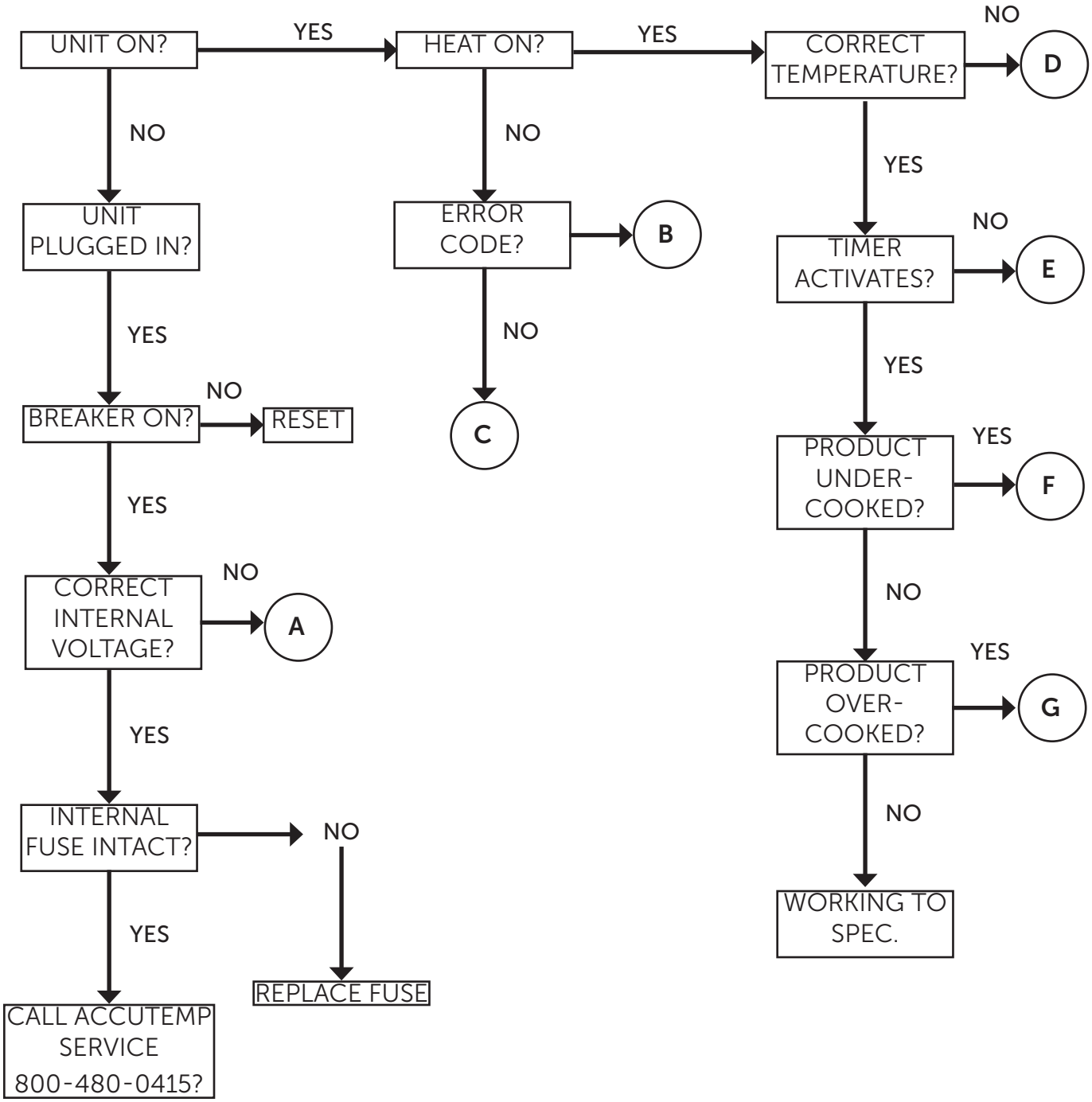

2.2 TROUBLESHOOT GUIDE

A	Incorrect voltage supplied	The unit is designed to work with 120V. Check that the original OEM plug is still being used and there is no damage to the cord. Verify correct voltage at receptacle.
B	Error code	If the display is showing Err, that is a sign the control board does not detect a temperature sensor connection. Access the control board and inspect the three RTD connections at J3, J4 & J5. If connections look good, test resistance across the black and white wires for each RTD. Compare to the table on page **
C	Unit not calling for heat.	Check which preset has been selected on the digital control. There are three LED lights on the control panel. Each corresponds to the call for heat to one of three elements in the platen. When the unit is calling for heat, the lights will flash. If the lights are steady, the control believes it has reached set point and has stopped the call for heat. If the lights are flashing, but the unit temp is not increasing: 1. Remove controller cover. 2. Disconnect the harness with a white and black wire that is attached to the fuse. 3. Disconnect the black harness from terminal J2-2 and the white with orange wire harness from terminal J7-1. 4. Ohm across the two white wires removed. If open then a lead wire to the bimetal thermostats or a bimetal thermostat is opened. Let the heaters cool then retest. 5. If still open, disassemble the heater box and test for the open bimetal thermostat. 6. If closed then look for a broken connection or burnt wire in the red harness. If the red harness and connections are good then replace the controller. If the lights are not flashing and unit temp does not increase: 1. Replace the controller. To have all three not flashing on warm up is not a likely event. All three RTDs would have to be damaged to the set point value which is highly unlikely.
D	Unit not achieving set temp	If the unit is heating but cycling at a lower/higher temp than set point: 1. Check unit presets are correct (see programming instructions on page 8). 2. When unit has reached cycle point, temp all three platen zones using a direct contact thermometer with a small amount of cooking oil applied. Verify if unit is reaching set temp within 10°F±. 3. If temp is not matching set point. Access unit control. 4. Remove white and black wires leading to one of three RTDs and take a resistance reading across them. Compare to the table on page **. 5. If RTD reading matches current platen temp, replace control board. 6. If RTD reading is off of current platen temp, replace RTD. Continue to test each RTD in turn.

E	Timer does not activate when Platen arm depressed	1. Manually depress 'Timer' button on control. If timer starts, refer to section 4.2.1 to reprogram to automatically start the timer. 2. Access the control panel interior and disconnect the magnetic proximity switch from the board. Set up a multimeter to test for resistance across the two wires leading to the proximity switch. 3. Test if the proximity switch closes when the arm is lowered. If the switch does not close, replace the switch. 4. If the switch does close and the timer cannot be activated manually, replace the control board.
F	Product undercooked	1. Adjust cooking time. 2. Adjust cooking temperature 3. Adjust platen height higher or lower.
G	Product overcooked	

3.0 REMOVAL AND REPLACEMENT OF PARTS

3.1 CONTROL BOARD

1. Power unit down and unplug from receptacle.
2. Low platen assembly so it is level with the griddle and secure it to griddle.
3. Access control interior by loosening two truss head screws, one at front of control box and one at rear (Item 18, Circled in , .)
4. Carefully lift the control box cover up, do not stretch the wires attached the the underside of the cover.

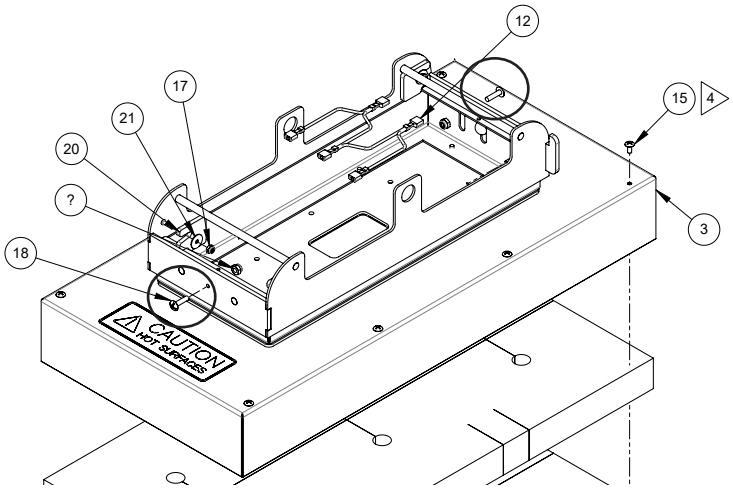

5. Turn the control box cover over to access the control board cover.
6. Remove the 2 nuts securing the control board cover, top left and bottom right.
7. Slide the control board cover up and away.
8. Remove wires from the control board, taking note of there original location.
9. Remove control board.
10. Replace with new part and reassemble in reverse order.
11. Ensure control programming is set according to customer wishes

3.2 RTD SENSOR

1. Follow typical safety protocol for electrical and work space and tools. Lock out tag out.
2. Disconnect from power source.
3. Lower handle assembly.
4. Remove the controller cover
5. Remove the inner controller cover
6. Disconnect RTD terminals from Control board and snip any wire ties that are binding the RTD wires together.
7. Loosely install controller cover assembly.
8. With one hand on the handle to prevent the arm assembly from rapidly lifting up, remove the heater cover 8-32 X 3/8" Truss head screws doing the ends first then finish in the center of the heater cover.
9. Slowly raise the arm assembly to its max height, leaving the lower half of the heater assembly laying on the griddle surface.
10. Carefully move the insulation away from around the offending RTD to gain clearance to the threaded end of the RTD sensor.
11. Use a 3/8" wrench to back out the RTD.
12. Reverse procedure to reinstall.
13. Use permanent lock-tite on the #8-32 heater cover screws when reinstalling.

3.3 OVERTEMP SWITCH

1. Follow typical safety protocol for electrical and work space and tools. Lock out tag out.
2. Disconnect from power source.
3. Lower handle assembly.
4. Remove the controller cover
5. Loosely install controller cover assembly.
6. With one hand on the handle to prevent the arm assembly from rapidly lifting up, remove the heater cover 8-32 X 3/8" Truss head screws doing the ends first then finish in the center of the heater cover.
7. Slowly raise the arm assembly to its max height, leaving the lower half of the heater assembly laying on the griddle surface.
8. Carefully move the insulation away from around the offending Overtemp switch to gain clearance to the threaded end of the Overtemp switch.
9. Use a 3/8" wrench to back out the switch.
10. Apply a small amount of thermal compound to the bottom of the overtemp switch where it will make contact with the element.
11. Reverse procedure to reinstall.
12. Use permanent lock-tite on the #8-32 heater cover screws when reinstalling.

3.4 MAGNETIC PROXIMITY SWITCH

1. Follow typical safety protocol for electrical and work space and tools. Lock out tag out.
2. Disconnect from power source.
1. Follow typical safety protocol for electrical and work space and tools. Lock out tag out.
2. Power unit down and unplug from receptacle.
3. Access control interior by removing two screws, one at front of control box and one at rear.
4. Carefully lift the control box cover up, do not stretch the wires attached the the underside of the cover.
5. Disconnect proximity switch wires from control board, marking their location.
6. Remove two nuts holding proximity switch in place.
7. Thread wiring out through arm assembly to complete removal of switch.
8. Reinstall in reverse order.

3.5 CAST ELEMENT ELEMENT

1. Follow typical safety protocol for electrical and work space and tools. Lock out tag out.
2. Disconnect from power source.
3. Lower handle assembly.
4. Remove the controller cover
5. Disconnect Element wires from Control board and snip any wire ties that are binding the wires together.
6. Loosely install controller cover assembly.
7. With one hand on the handle to prevent the arm assembly from rapidly lifting up, remove the element cover 8-32 X 3/8" Truss head screws doing the ends first then finish in the center of the element cover.
8. Slowly raise the arm assembly to its max height, leaving the lower half of the element assembly laying on the griddle surface.
9. Carefully move the insulation away from the element.
10. Use a 1/4" socket wrench to remove the 6 nuts holding the element in place and lift the element out.
11. Lay the replacement cast element on a table with the smooth shiny side up. Wipe the surface clean and apply 1.5 - 2.0 ounces of heat transfer compound to the smooth side of the casting using a putty knife.
12. Use the putty knife to spread the thermal compound across the entire surface of the cast element.
13. When the surface is covered, hold the fine tooth comb (included with the kit) vertical and draw it along the length of the element in several passes to obtain an even, uniform thickness coating across the entire surface. After each pass, remove excess compound with the putty knife. When finished it should look like an even surface containing fine lines of the compound. If the lines of compound do not cover, add additional compound in those areas and repeat.
14. Set the element in place on the platen with the heat transfer paste in contact with the platen bottom. Refer to drawing DEV002214-1 in the parts section of manual for orientation guidance. Try not to get paste on the studs when putting the element in place. Center the holes in the casting on the studs.
15. Place the large fender washers over the center studs.
16. Place a spring washer over each stud. Spring washers are conical shapedwashers that flatten out as the nuts are tightened against them. The springwashers should point up like a miniature volcano.
17. Install new nuts on the studs and hand tighten. Use an inch pound torquewrench and tighten each nut to 37 inch pounds starting in the center, working first to the sides and then to the end. Tighten twice in this manner. Do not over-tighten the nuts.
18. Reinstall overtemp switch on new element following instructions in 3.3.
19. Reverse procedure from step 7 to complete repair.
20. Use permanent lock-tite on the #8-32 element cover screws when reinstalling.

3.6 DIE SPRING

1. Follow typical safety protocol for electrical and work space and tools. Lock out tag out.
2. Disconnect from power source.
3. Remove the pivot assembly back cover.
4. Remove the pivot assembly bottom cover.
5. Measure the position of the 5/16" nylock nut that retains the urethane die spring on the threaded shaft.
6. Use a ½" deep socket and remove the 5/16" nylock nut, 1 standard flat washer and 2 large flat washers and urethane die spring from the threaded shaft.
7. To reinstall ensure a large flat washer is on either side of the urethane die spring followed by the standard 5/16" flat washer and 5/16" nylock nut. It is recommended that a new 5/16" nylock nut is used to ensure proper locking of the nut.
8. Tighten the nut until the depth measurement is the same as taken in step 5.
9. Check for proper operation before installing the covers.
10. Reinstall the bottom cover and the back cover.
11. Apply power per the typical electrical safety protocol

PARTS

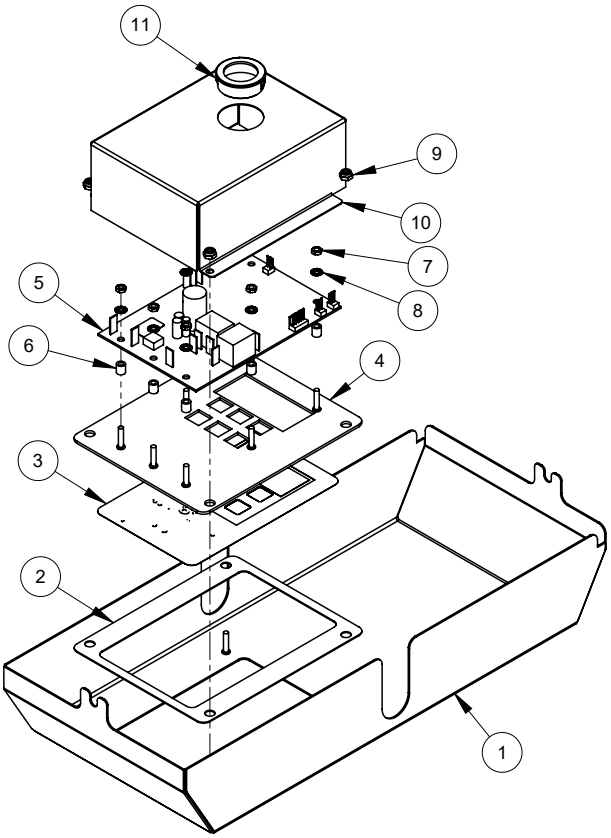

DEV002280-1

1	AT0H-2576-2	11	GROMMET, 1¼" NYLON
1	DEV002285-1	10	COVER, CONTROLLER
4	AT0F-2691-21001	9	NUT, #6-32 NYLOC
7	AT0F-2666-21000	8	WASHER, SS #6 EXTERNAL TOOTH LOCK
7	AT0F-3621-1	7	NUT, #6-32UNC-2B UNDERSIZE MACHINE SCREW HEX
7	AT0H-3623-1	6	SPACER, ROUND CLEAR HOLE
1	AT0E-6153-2-RXX	5	CONTROLLER, QUANTEM SERIES 130
1	DEV002284-1	4	PLATE ASSY, CONTROLLER MOUNT
1	DEV002057-1	3	OVERLAY, CONTROL PANEL
1	DEV002295-1	2	GASKET, CONTROLLER
1	DEV002281-1	1	COVER ASSEMBLY
DEV002280-1	PART NUMBER	ITEM	DESCRIPTION

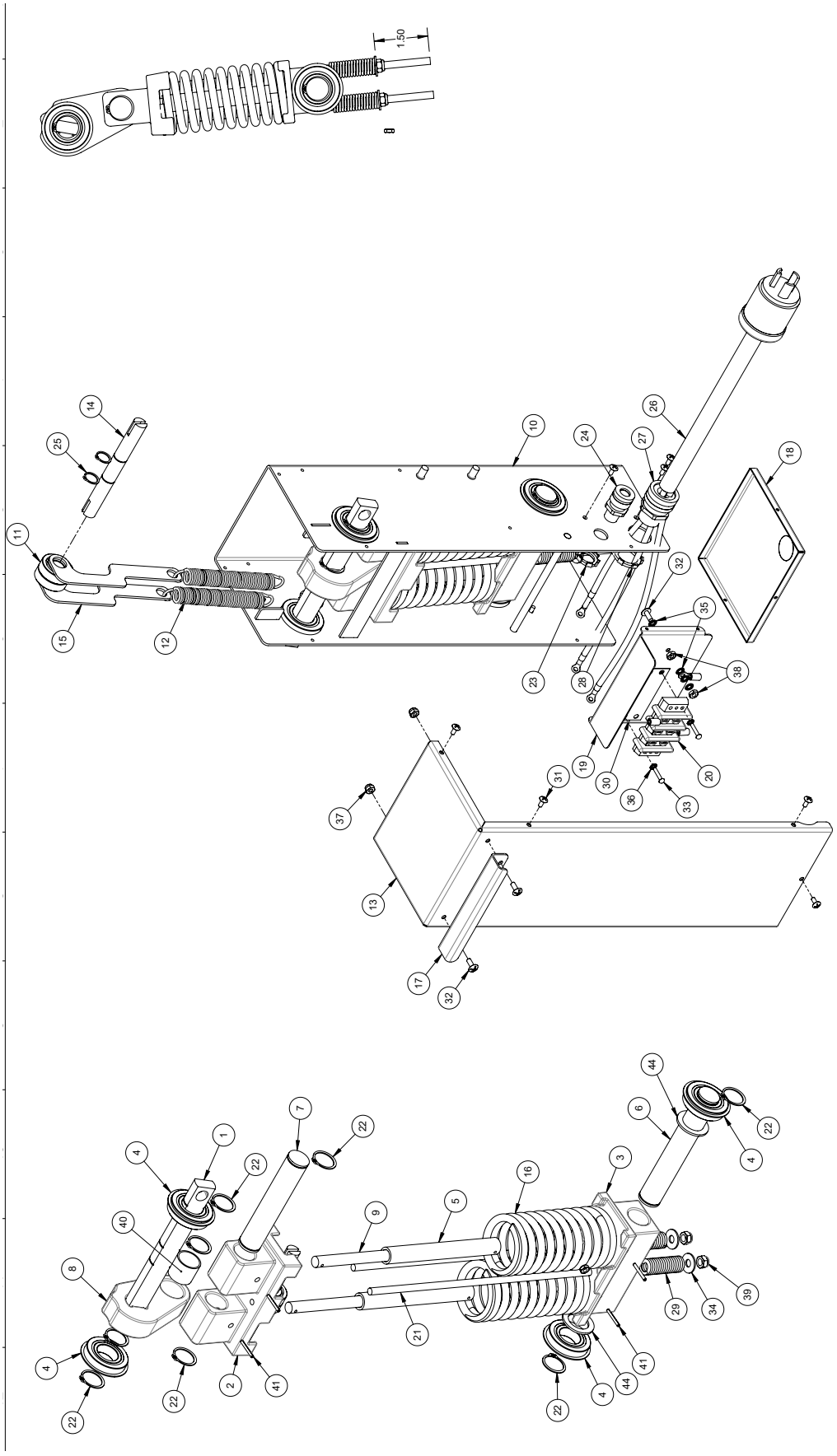
1.50
14
25
11
15
12
10
24
27
26
18
32
35
38
23
28
19
30
36
33
20
31
37
13
17
32
44
6
22
4
7
22
1
4
22
40
8
4
22
22
2
41
9
5
16
3
21
41
4
44
22
29
34
39

2	MCMASTER 3088A487	-00+	44	1" X 1 1/2" BEARING SHIM
1	AT0F-2061-23070	B02	43	SCREW, #6-32 X 7/16" FLAT HEAD MACHINE
1	AT0H-6329-1	A	42	MAGNET, RETAINING
4	AT0F-2627-04134	B02	41	SPRING PIN 1/8 x 1
1	MCMASTER 2868T201	-00+	40	BEARING, SLEEVE - BRONZE 1" ID. X 1" LONG
2	AT0F-2691-61002	D01	39	5/16-18 UNC-2B NYLOCK NUT, ZINC PLATED
2	AT0F-2778-41001	E01	38	NUT, #10-24UNC-2B SS HEX MACHINE SCREW
2	AT0F-2691-41011	D01	37	NUT, #10-24 WAXED NYLOC
2	AT0F-2666-21000	B01	36	WASHER, SS #6 EXTERNAL TOOTH LOCK
4	AT0F-2666-40000	B01	35	WASHER, SS #10 INTERNAL TOOTH LOCK
2	AT0F-1052-61000	G07	34	WASHER 5/16 TYPE B PLAIN
2	AT0F-2755-21060	D01	33	SCREW, #6-32UNC x 3/4 PHILIPS ROUND HEAD MACHINE
3	AT0F-1046-41040	A01+	32	SCREW, #10-24 x 1/2 PHLP TRUSS HEAD
13	AT0F-1046-31030	A01+	31	SCREW, #8-32 x 3/8 PHLP TRUSS HEAD
1	AT0E-3025-3	A02	30	INSULATOR STRIP, 3 POSITION DOUBLE ROW
2	MCMASTER 9623K23	-00+	29	SPRING, DIE
1	AT0E-2086-2	B01	28	CORD GRIP LOCKNUT
1	AT0E-1049-8	F+	27	STRAIN RELIEF 3/4" HUB CABLE RANGE .500-.625
1	AT0A-2788-50	U06+	26	POWER CABLE ASSY
2	MCMASTER 97633A230	-00+	25	RING RETAINING - 5/8 SHAFT
1	AT0E-1049-9	-+	24	STRAIN RELIEF 3/8" HUB CABLE RANGE .312-.437
1	AT0E-2086-5	B01	23	CORD GRIP LOCKNUT
8	MCMASTER 97633A300	-00+	22	RING, EXTERNAL RETAINING
2	DEV001743-1	-04	21	ROD, THREADED
1	AT0E-1134-3	F	20	3 POSITION TERMINAL BLOCK
1	DEV002049-1	-02	19	BRACKET, TERMINAL BLOCK
1	DEV002041-1	-03	18	COVER, BOTTOM, LIFT ASSEMBLY
1	DEV001658-1	-04	17	BRACKET, BACKSTOP
2	DEV001463-1	-01	16	SPRING, COMPRESSION
2	DEV001750-1	-04	15	YOKE, DETENT SPRING
1	DEV001387-1	-07	14	SHAFT, DETENT
1	DEV002297-1	-03	13	COVER, CB HOUSING
2	DEV001377-1	+	12	SPRING, TENSION
2	MCMASTER 6383K47	-00+	11	BEARING, BALL, LIGHT DUTY
1	DEV002223-1	-01+	10	ASSEMBLY, COUNTER BALANCE HSG
2	DEV001369-1	-03	9	PIN, GUIDE
1	DEV001977-1	-02	8	LEVER. LIFT
1	DEV001322-2	-03	7	PIN, HINGE
1	DEV001322-1	-03	6	PIN, HINGE
2	DEV001320-1	-03	5	TUBE, GUIDE
4	DEV001319-1	-01+	4	BEARING, FLANGED BALL
1	DEV001976-1	-02	3	SPRING BLOCK, LOWER, MODIFIED
1	DEV001974-1	-02	2	SPRING BLOCK, UPPER, MODIFIED
1	DEV001313-1	-04	1	SHAFT, PIVOT
DEV001389-1	PART NUMBER	Revision	ITEM	DESCRIPTION

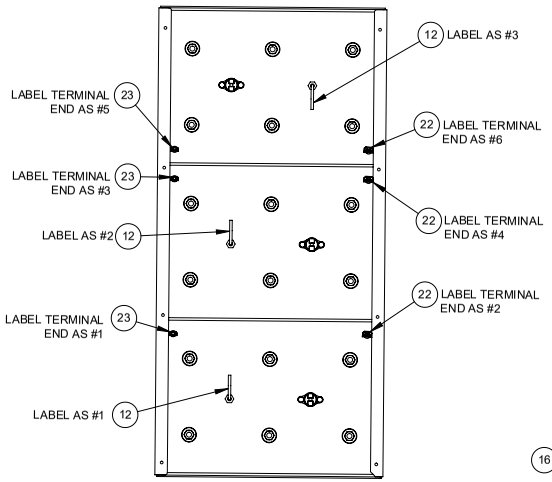

FRONT

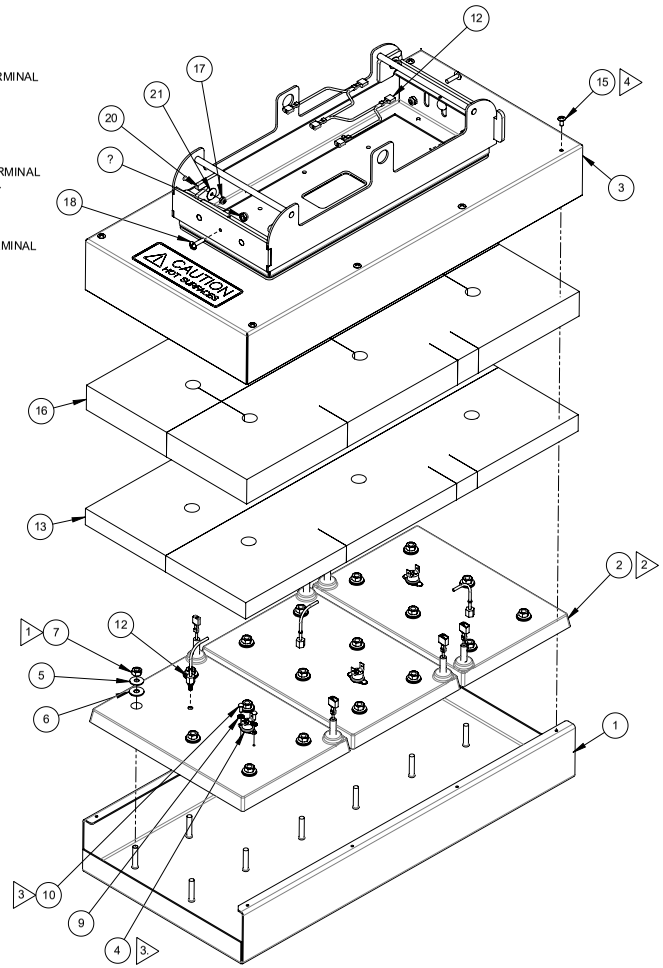

DEV002214-1

DEV002214-1	PART NUMBER	Revision	ITEM	DESCRIPTION
3	AT0E-2699-3	E+	23	TERMINAL, QDISC, INSULATED FEM - 14-16AWG .250 X .032 TAB
3	AT0E-2684-2	A02	22	QD TERMINAL MALE INSULATED 14-16 AWG .250 x .032 TAB
4	AT0F-1052-23000	G07	21	WASHER #6 TYPE B PLAIN
4	DEV002324-1	-01	20	PLATE, LOCK, PLATEN
2	AT0F-2691-41001	D01	19	NUT, #10-24 NYLOC
2	AT0F-1046-41060	-+	18	#10-24 X 3/4 TRUSS HEAD
4	AT0F-2691-21001	D01	17	NUT, #6-32 NYLOC
2	AT2I-6065-1	-04	16	INSULATION, UPPER PLATEN
8	AT0F-1046-31030	A01+	15	SCREW, #8-32 x 3/8 PHLP TRUSS HEAD
AR	AT0H-3412-1	B	14	THERMAL JOINT COMPOUND
2	AT2I-5787-1	-04	13	INSULATION, UPPER PLATEN
1	DEV002245-8	-01	12	HARNESS ASSY, XLR8
3	AT0E-6033-1	-06	12	SENSOR, REPLACEABLE RTD
6	AT0F-2755-21030	D01	10	SCREW, #6-32UNC x 3/8 PHILIPS ROUND HEAD MACHINE
6	AT0F-2666-21000	B01	9	WASHER, SS #6 EXTERNAL TOOTH LOCK
AR	AT0H-3065-4	B02	8	THREAD LOCKER 272
18	AT0F-3401-1	-	7	NUT, SPECIAL LOCKING 1/4-20UNC-2B
18	AT0F-1052-51000	G07	6	WASHER 1/4 TYPE B PLAIN STAINLESS STEEL
18	AT0F-2663-4	B02	5	WASHER, Ø.687 OD BELLEVILLE
3	AT1E-2653-5	H+	4	OVERTEMP SWITCH
1	DEV002215-1	-01	3	COVER ASSY, HEATER
3	AT0E-4649-2	-01	2	HEATER. IN-CAST
1	DEV002211-1	-01	1	PLATE ASSEMBLY, HEATER

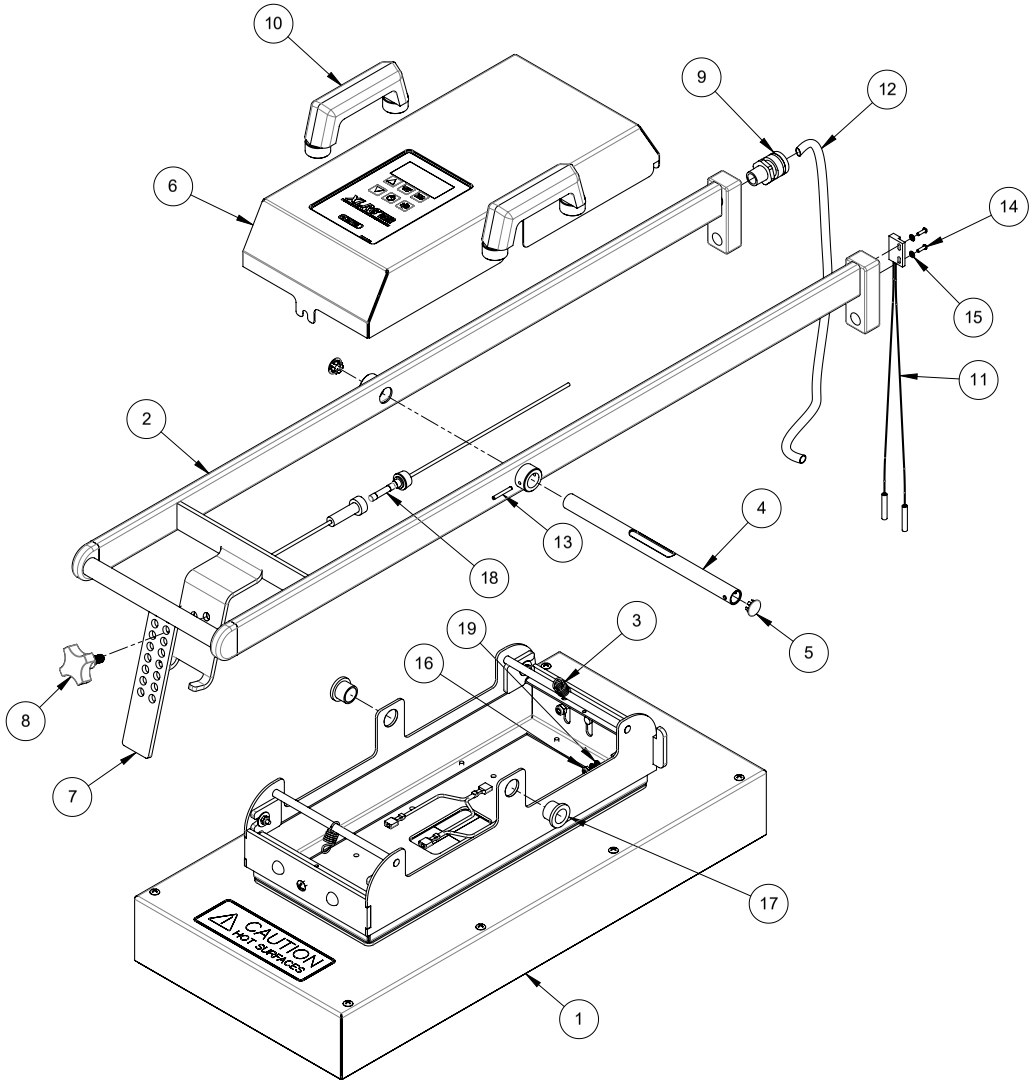

DEV002213-1
SHOWN

2	AT0F-2666-21000	B01	19	WASHER, SS #6 EXTERNAL TOOTH LOCK
1	AT0E-2731-5	-+	18	FUSE 15 AMP 250V
2	AT0H-5253-1	A	17	BEARING, LUB FLG SLV - 5/8 ID X 3/4 OD X 5/8 LG
1	AT0F-2691-21001	D01	16	NUT, #6-32 NYLOC
2	AT0F-2666-10000	B01	15	WASHER, SS #4 INTERNAL TOOTH LOCK
2	AT0F-2755-11030	D01	14	SCREW, PHILLIPS ROUND HEAD
1	AT0F-2627-04134	B02	13	SPRING PIN 1/8 x 1
1	AT0E-6237-04200	-01	12	CONDUIT, FLEXIBLE
1	DEV002245-9	-01+	11	HARNESS ASSY, XLR8
2	DEV001902-1	-02	10	HANDLE ASSEMBLY
1	AT0E-1049-9	-+	9	STRAIN RELIEF 3/8" HUB CABLE RANGE .312-.437
1	DEV001969-1	-01+	8	KNOB, MODIFIED
1	DEV002323-1	-02	7	SUPPORT, FOOT
1	DEV002280-1	-02	6	COVER ASSEMBLY
2	AT0H-6034-1	-01+	5	PLUG, PANEL, ROUND
1	AT2M-5888-1	-04	4	SHAFT, HOLLOW
2	AT0H-5768-1	-01	3	SPRING, EXTENSION
1	DEV002008-1	-02	2	HANDLE ASSY, STRAIGHT
1	DEV002214-1	-02+	1	HEATER ASSEMBLY
DEV002213-1	PART NUMBER	Revision	ITEM	DESCRIPTION

LIMITED WARRANTY
One Year– Parts and Labor
U.S. & Canada Only

AccuTemp Products, Inc. (AccuTemp) warrants that your AccuTemp equipment will be free of defects in material and workmanship under normal use for a period of twelve (12) months from installation or fifteen (15) months from date of shipment from AccuTemp, whichever date first occurs (the Warranty Period). Registration of AccuTemp equipment is required at the time of installation. Damage to AccuTemp equipment that occurs during shipment must be reported to the carrier, and is not covered under this warranty. The reporting of any damage during shipment is the sole responsibility of the commercial purchaser/user of such AccuTemp equipment.

AccuTemp provides an active service department, which should be contacted and advised of service issues, regardless of the warranty period. During the warranty period, AccuTemp must be contacted for warranty repairs and agrees to repair or replace, at its option, F.O.B. factory, any part which proves to be defective due to defects in material or workmanship, provided the equipment has not been altered in any way and has been properly installed, maintained, and operated in accordance with the instructions in the AccuTemp Owners Manual. During the warranty period, AccuTemp also agrees to pay for any factory authorized equipment service agency (within the continental United States and Canada) for reasonable labor required to repair or replace, at our option, F.O.B. factory, any part which proves to be defective due to defects in materials or workmanship, provided the service agency has received advance approval from AccuTemp factory service to perform the repair or replacement. This warranty includes travel time not to exceed two hours and mileage not to exceed 50 miles (100 miles round trip), but does not include post start-up assistance or training, tightening of loose fittings or external electrical connections, minor adjustments, maintenance, or cleaning. AccuTemp will not reimburse the expense of labor required to replace parts after the expiration of the warranty period.

Proper installation is the responsibility of the dealer, owner-user, or installing contractor and is not covered by this warranty. Improper installation can affect your warranty. Installation is the responsibility of the Dealer, Owner/User or the Installation Contractor. See the Installation section of the Owners Manual. While AccuTemp products are built to comply with applicable standards for manufacturers, including Underwriters Laboratories (UL) and National Sanitation Foundation (NSF), it is the responsibility of the owner and the installer to comply with any applicable local codes that may exist.

AccuTemp makes no other warranties or guarantees, whether expressed or implied, including any warranties of performance, merchantability, or fitness for any particular purpose. AccuTemp liability on any claim of any kind, including negligence, with respect to the goods and services covered hereunder, shall in no case exceed the price of the goods and services, or parts thereof, which gives rise to the claim. In no event shall AccuTemp be liable for special, incidental, or consequential damages, or damages in the nature of penalties.

This constitutes the entire warranty, which supersedes and excludes all other warranties, whether written, oral, or implied.

AccuTemp®
INNOVATIVE COOKING EQUIPMENT SOLUTIONS

AccuTemp product may be covered by one or more US patents.
See www.accutempip.net

LIFETIME™
SERVICE & SUPPORT
1-800-480-0415 | service@accutemp.net